Frame packing ADEO -MILO prof 016/30 50x70 (FRAME MILO SILVER /OAK/BLACK/WHITE 50x70 cm INSPIRE)

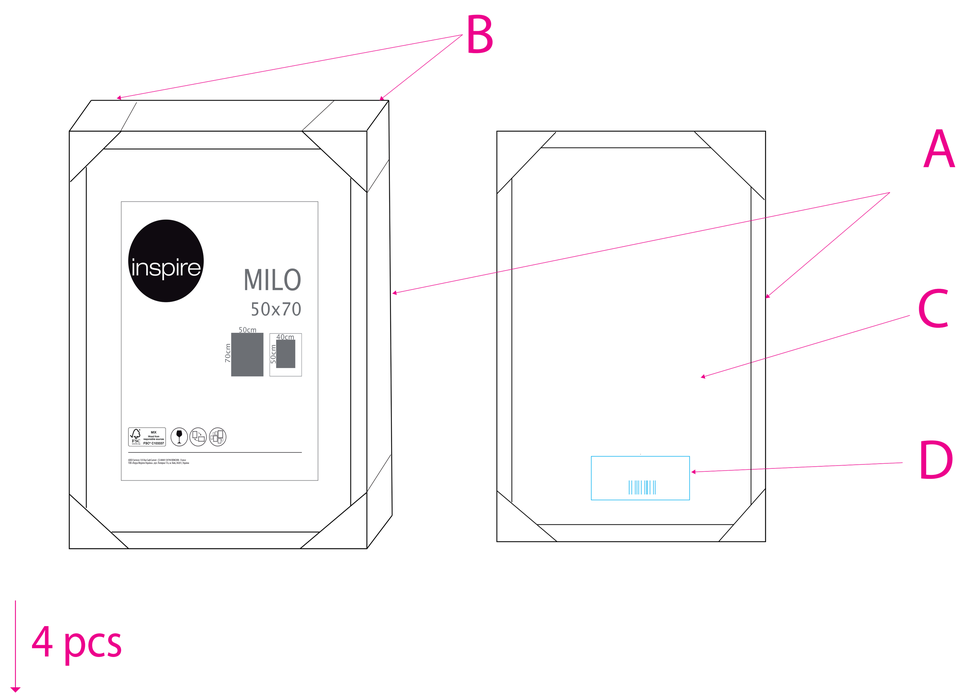

A-Foto frame 50x70 cm
B- 30 cardboard corner (mm) - 4 pcs.
C- Polyolefin film
D- Label 60x100 mm (with frame bar code)
on foil
E- No Inner carton
F - No Inner carton
G- Master carton Fefco 201 dim. ext. 730x133x530 [mm]
(Master 50x70) Wave BC brown / brown 650g / m2
4 Inner cartons in a Master carton
H- Label 100x150 mm 2 pcs
I- Tape for gluing cardboard boxes
J- Wooden pallet EPAL 1200 x 800 [mm]
K- Spacers from a plate to be secured
top and bottom of the pallet load
L- Angle of solid cardboard 4 pcs on each side of the pallet
Ł- Teśma PP- for securing pallet load
minimum 2 stripes on each side
M- stretch film - minimum 2 times
N- Label 150x100mm 2 pcs
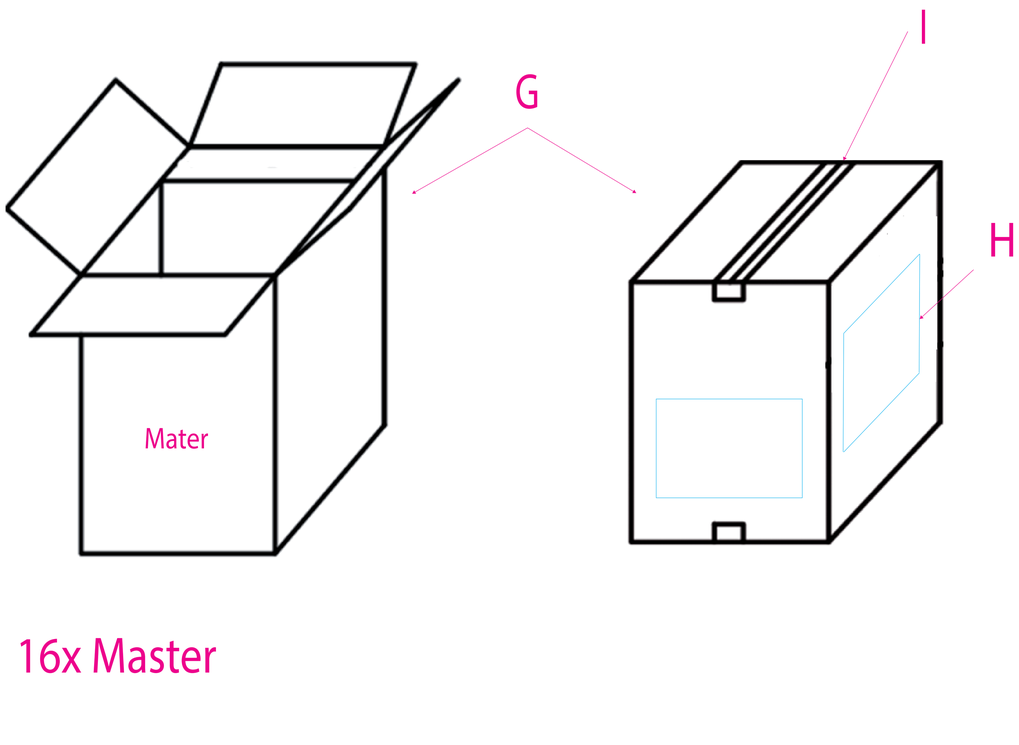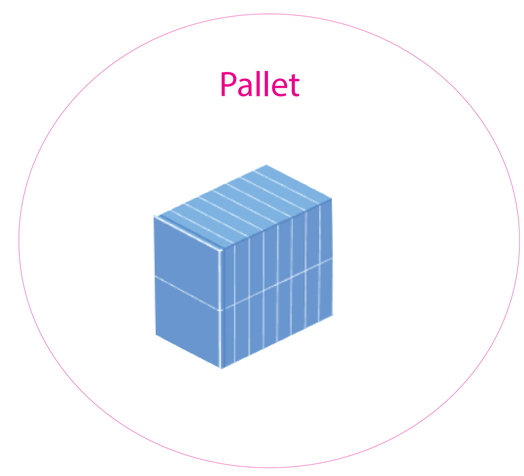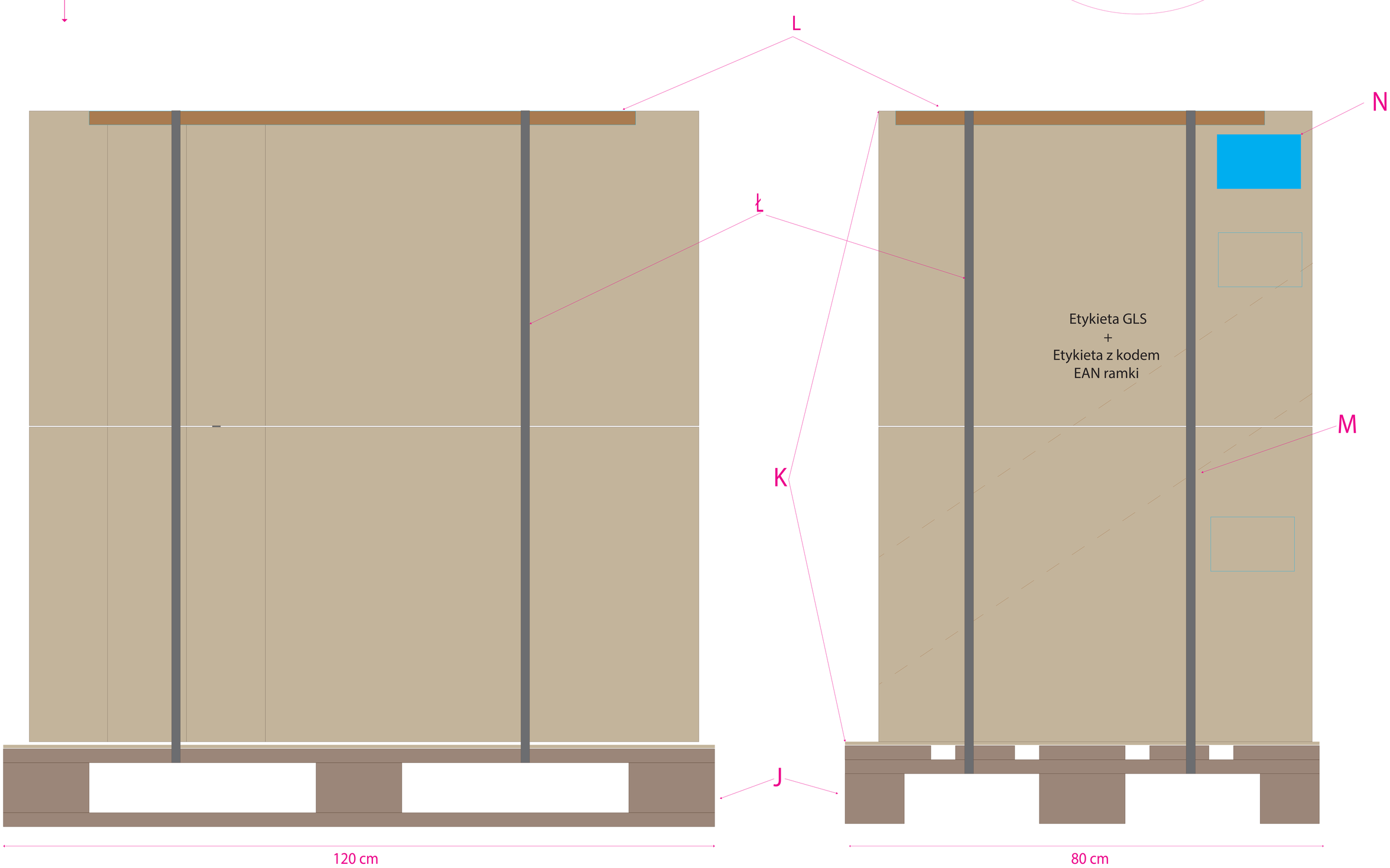
Quantity of product on the pallet 64 pcs
Quantity of Master Cartons on a pallet 16 pcs.